FRONT PERSPECTIVE VIEW

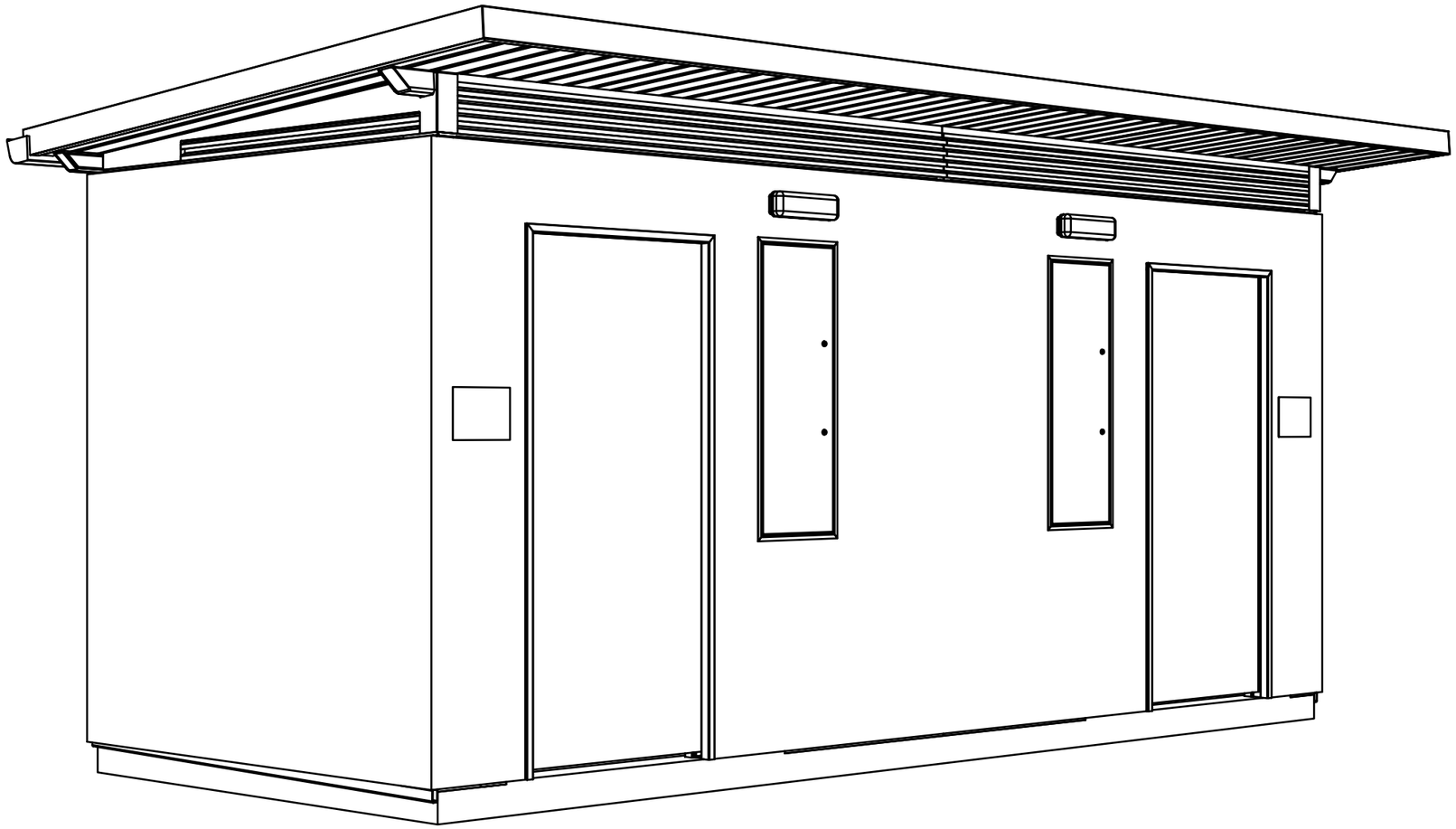

New Zealand
26 Paramount Dve Henderson 0610
PO Box 33-256 Takapuna, Auckland
T: +64-9-838-8912 F: +64-9-838-8913

Australia
Unit 18, 62-66 Newton Rd Wetherill Park
PO Box 12 Liverpool NSW 1871
T: +61-2-975-3444 F: +61-2-1-800-105-504

USA
954 Toro St San Luis Obispo CA 93401
PO Box 13310 San Luis Obispo CA 93406
T: (800) 676-5290 or 1-800-303-3506

Description: JUPITER TWIN 32DD AUS		Proj:	Units: mm	Rev. **1-B**	Rev Date. **8/01/2019**
		Tolerance: +/-0.5	Scale: N.T.S.	Checked by:	Approved by:
Material:	Finish: REF	Drawn by: JJG	Creation Date: 16/05/2018	Sheet No. 1 / 11	Drawing No: **AS-JUP32DD-AU**

DO NOT SCALE - IF IN DOUBT ASK

SPECIFICATION SUBJECT TO CHANGE WITHOUT NOTICE

REAR PERSPECTIVE VIEW

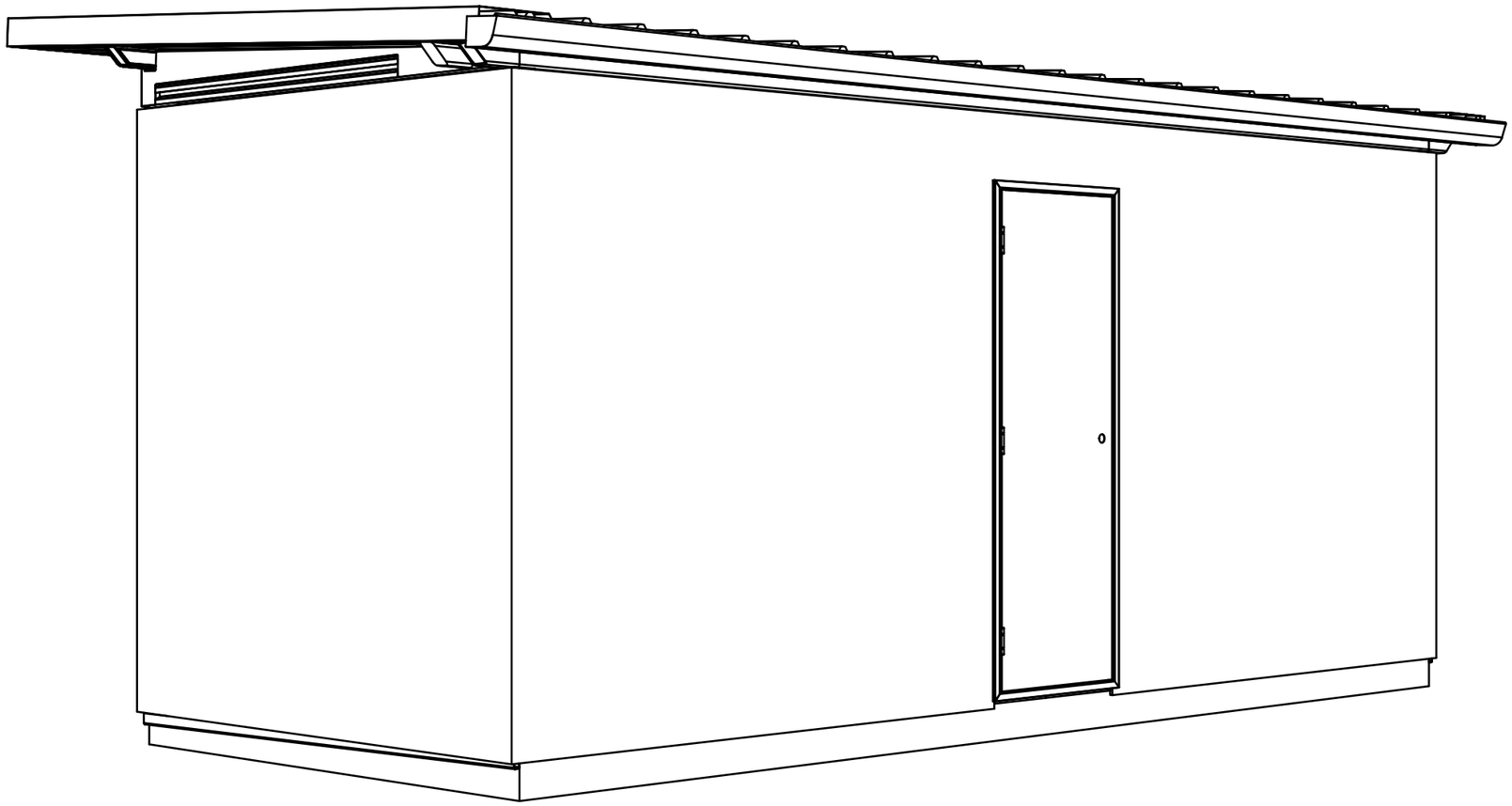

exeLOO®

New Zealand
26 Paramount Dve Henderson 0610
PO Box 33-256 Takapuna, Auckland
T: +64-9-838-8912 F: +64-9-838-8913

Australia
Unit 18, 62-66 Newton Rd Wetherill Park
PO Box 12 Liverpool NSW 1871
T: +61-2-975-3444 F: +61-2-1-800-105-504

USA
954 Toro St San Luis Obispo CA 93401
PO Box 13310 San Luis Obispo CA 93406
T: (800) 676-5290 or 1-800-303-3506

Description: JUPITER TWIN 32DD AUS		Proj:	Units: mm	Rev. **1-B**	Rev Date. **8/01/2019**
		Tolerance: +/-0.5	Scale: N.T.S.	Checked by:	Approved by:
Material:	Finish: REF	Drawn by: JJG	Creation Date: 16/05/2018	Sheet No. 2 / 11	Drawing No: **AS-JUP32DD-AU**

DO NOT SCALE - IF IN DOUBT ASK

SPECIFICATION SUBJECT TO CHANGE WITHOUT NOTICE

FRONT ELEVATION

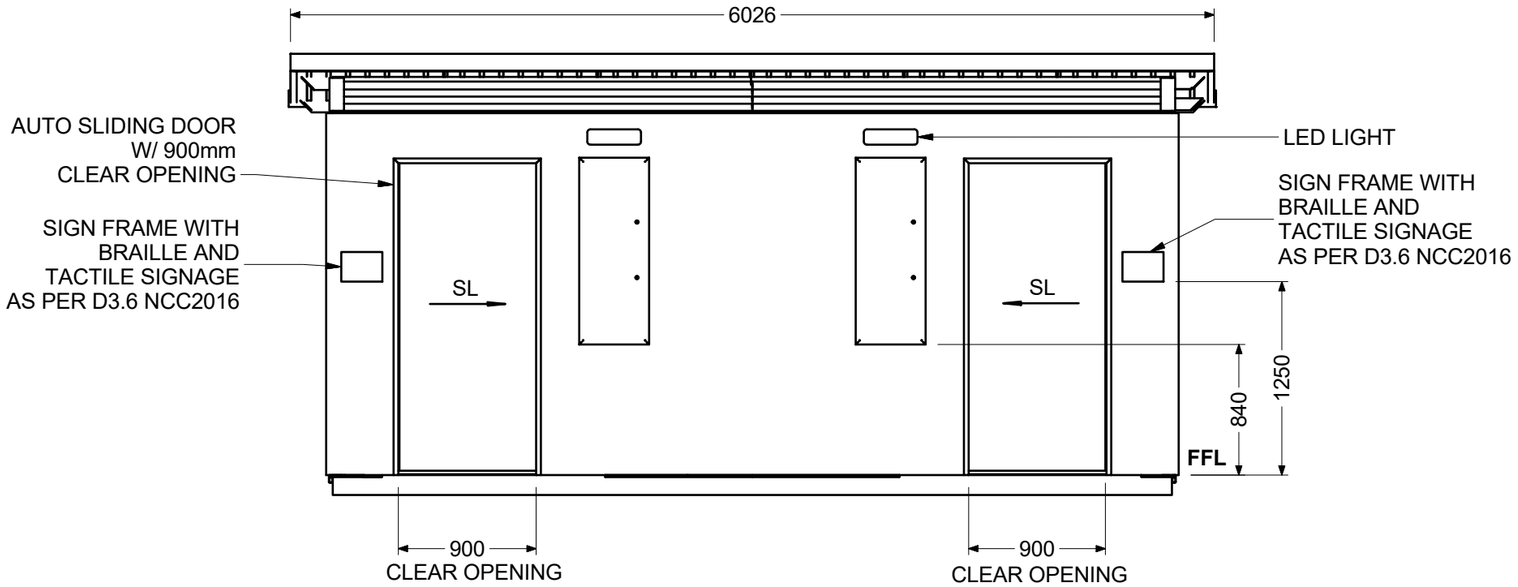

RIGHT ELEVATION

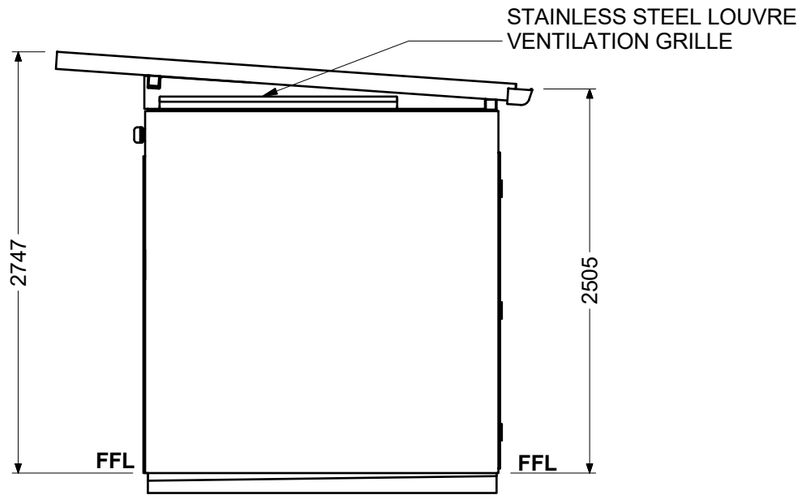

ROOFING: STRUCTURAL INSULATED PANEL FIXED WITH STEEL HWF CLASS 4 14g 14x150mm TEK SCREW WITH AS 3566/EPDM SEAL, PAINTED GALVANISED PROFILE WASHER ON 75mm SHS SUPAGAL ROOF RAFTERS ALL FLASHINGS 0.55mm ZM8

REAR ELEVATION

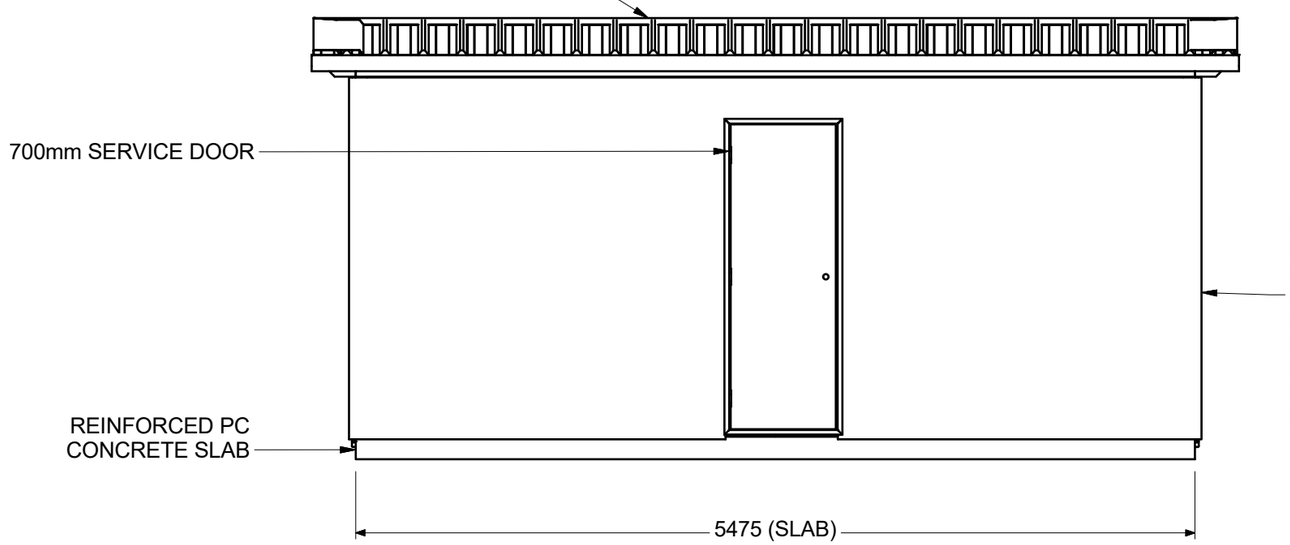

EXTERIOR CLADDING:
12-18mm COMPRESSED SHEET PAINTED WITH E-LINE 379 POLYURATHANE MARINE DIRECT FIXED WITH CLASS 4 STEEL TITE 10g-16x45mm CSK WING TEK SCREWS TO SUPAGAL RHS FRAMING JOINS SEALED WITH 80x12mm BUTYL INSEAL TAPE. PHOTOFILM TO BE APPLIED.

LEFT ELEVATION

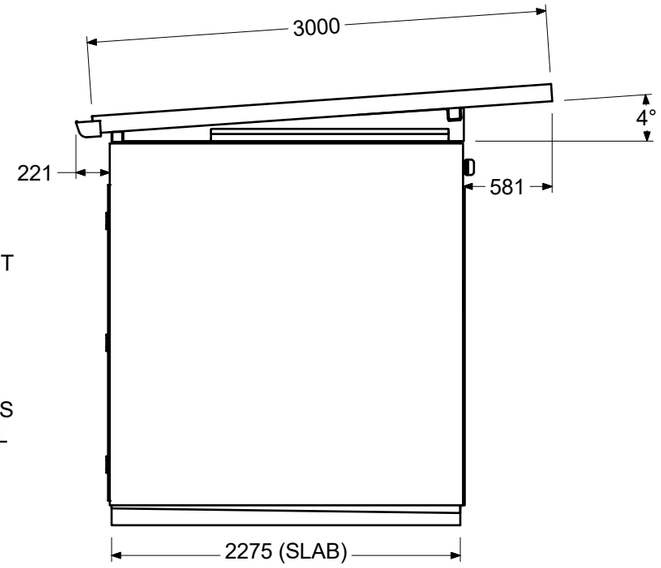

exeLOO®

New Zealand
26 Paramount Dve Henderson 0610
PO Box 33-256 Takapuna, Auckland
T: +64-9-838-8912 F: +64-9-838-8913

Australia
Unit 18, 62-66 Newton Rd Wetherill Park
PO Box 12 Liverpool NSW 1871
T: +61-2-975-3444 F: +61-2-1-800-105-504

USA
954 Toro St San Luis Obispo CA 93401
PO Box 13310 San Luis Obispo CA 93406
T: (800) 676-5290 or 1-800-303-3506

Description:	Proj:	Units:	Rev.	Rev Date.
JUPITER TWIN 32DD AUS		mm	1-B	8/01/2019

Tolerance:	Scale:	Checked by:	Approved by:
+/-0.5	N.T.S.		

Material:	Finish:	Drawn by:	Creation Date:	Sheet No.	Drawing No:
	REF	JJG	16/05/2018	3 / 11	AS-JUP32DD-AU

DO NOT SCALE - IF IN DOUBT ASK

SPECIFICATION SUBJECT TO CHANGE WITHOUT NOTICE

FLOOR PLAN

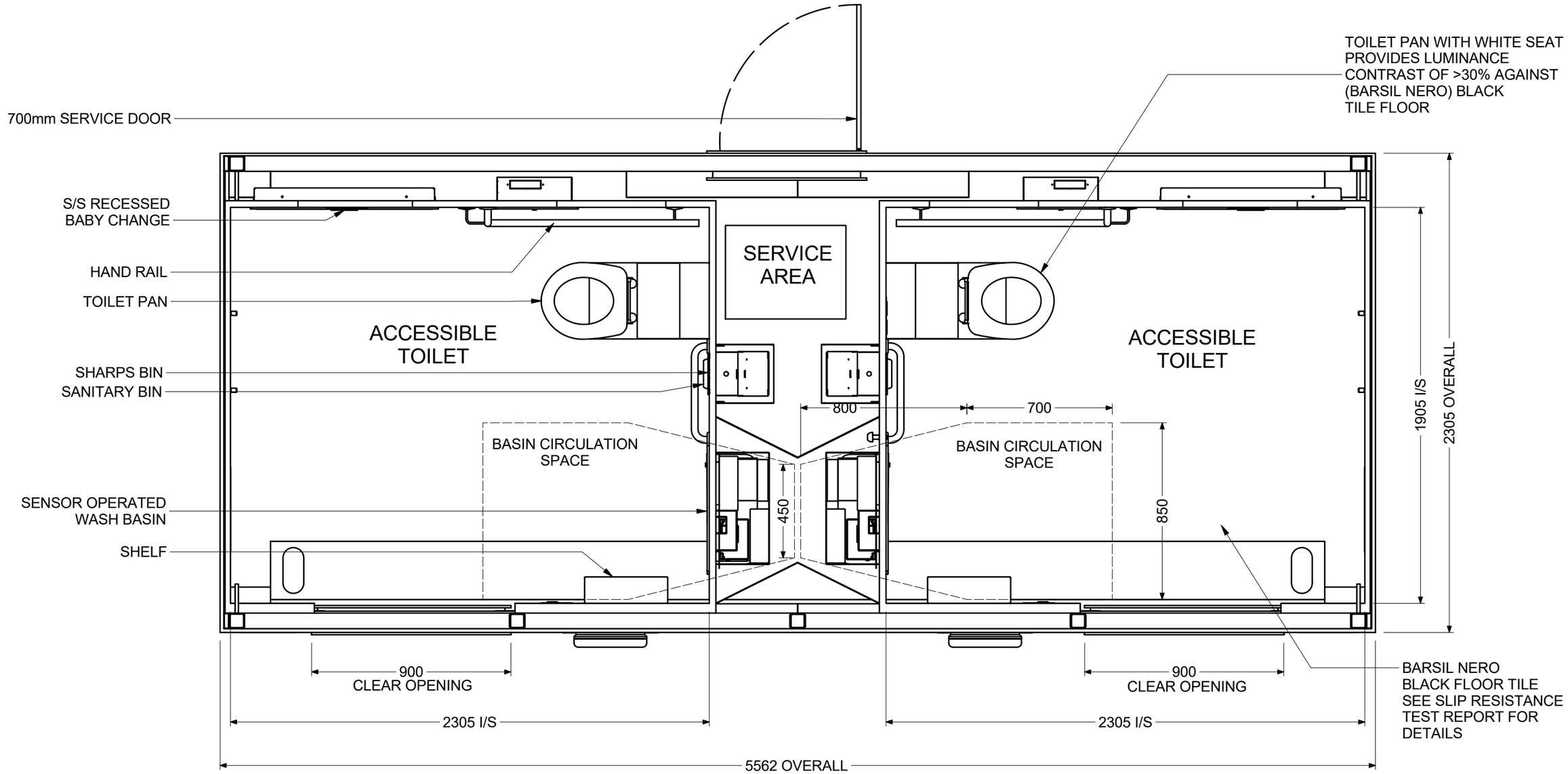

exeLOO®

New Zealand
26 Paramount Dve Henderson 0610
PO Box 33-256 Takapuna, Auckland
T: +64-9-838-8912 F: +64-9-838-8913

Australia
Unit 18, 62-66 Newton Rd Wetherill Park
PO Box 12 Liverpool NSW 1871
T: +61-2-975-3444 F: +61-2-1-800-105-504

USA
954 Toro St San Luis Obispo CA 93401
PO Box 13310 San Luis Obispo CA 93406
T: (800) 676-5290 or 1-800-303-3506

Description: JUPITER TWIN 32DD AUS		Proj:	Units: mm	Rev. **1-B**	Rev Date. **8/01/2019**
		Tolerance: +/-0.5	Scale: N.T.S.	Checked by:	Approved by:
Material:	Finish: REF	Drawn by: JJG	Creation Date: 16/05/2018	Sheet No. 4 / 11	Drawing No: **AS-JUP32DD-AU**

DO NOT SCALE - IF IN DOUBT ASK

SPECIFICATION SUBJECT TO CHANGE WITHOUT NOTICE

SCHEMATIC SERVICES PLAN

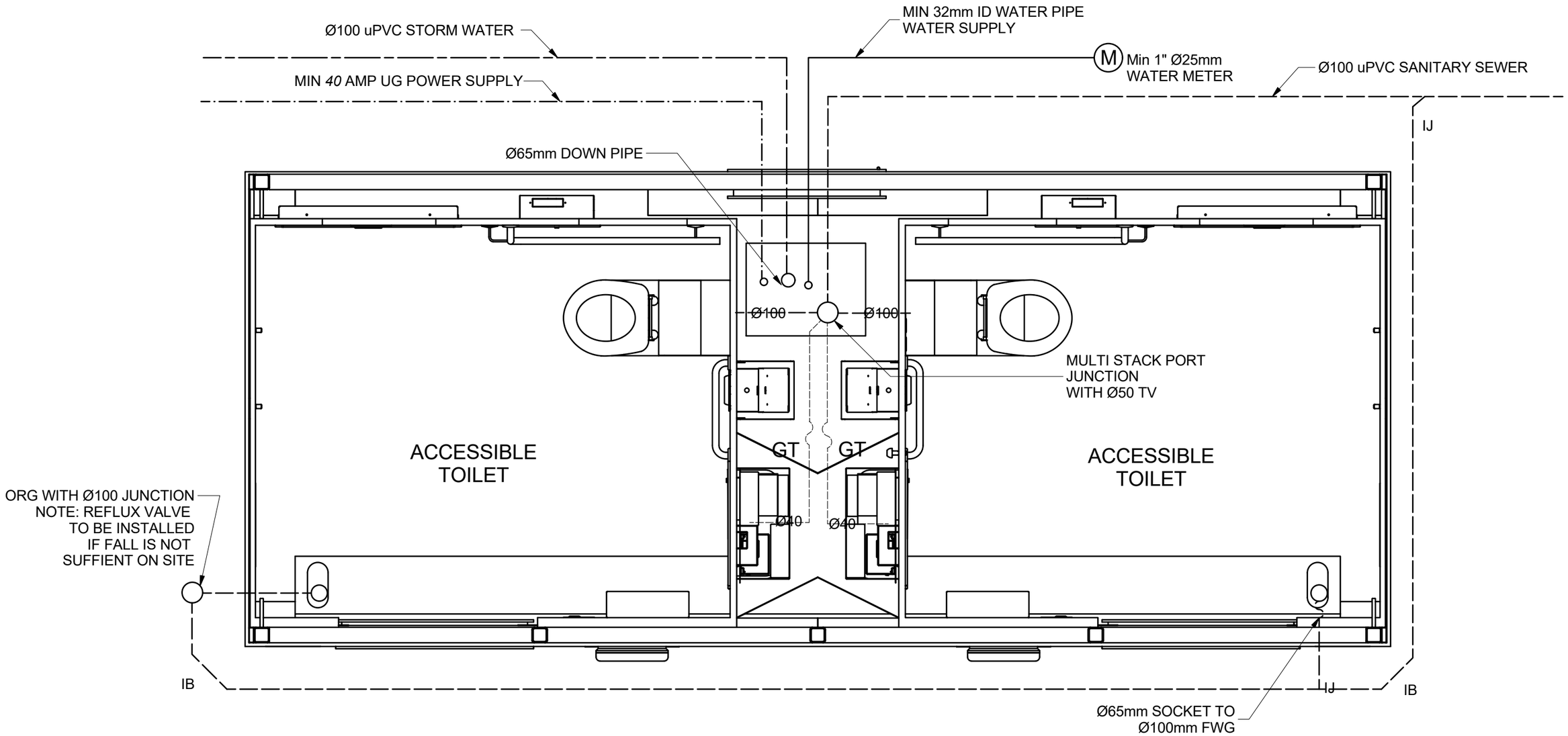

Exeloo Ltd does not guarantee that information shown on these drawings indicate any more than the presence or absence of such services and will not accept liability for any damage or losses caused to any party, by the actions of the Contractor or its agents and subcontractors. The Contractor is required to make its own investigations, contact all service providers and verify the type and location of all services prior to commencement of any construction work on site.

exeloo®

New Zealand
26 Paramount Dve Henderson 0610
PO Box 33-256 Takapuna, Auckland
T: +64-9-838-8912 F: +64-9-838-8913

Australia
Unit 18, 62-66 Newton Rd Wetherill Park
PO Box 12 Liverpool NSW 1871
T: +61-2-975-3444 F: +61-2-1-800-105-504

USA
954 Toro St San Luis Obispo CA 93401
PO Box 13310 San Luis Obispo CA 93406
T: (800) 676-5290 or 1-800-303-3506

Description: JUPITER TWIN 32DD AUS		Proj:	Units: mm	Rev. **1-B**	Rev Date. **8/01/2019**
		Tolerance: +/-0.5	Scale: N.T.S.	Checked by:	Approved by:
Material:	Finish: REF	Drawn by: JJG	Creation Date: 16/05/2018	Sheet No. 5 / 11	Drawing No: **AS-JUP32DD-AU**

DO NOT SCALE - IF IN DOUBT ASK

SPECIFICATION SUBJECT TO CHANGE WITHOUT NOTICE

SECTION VIEW A-A

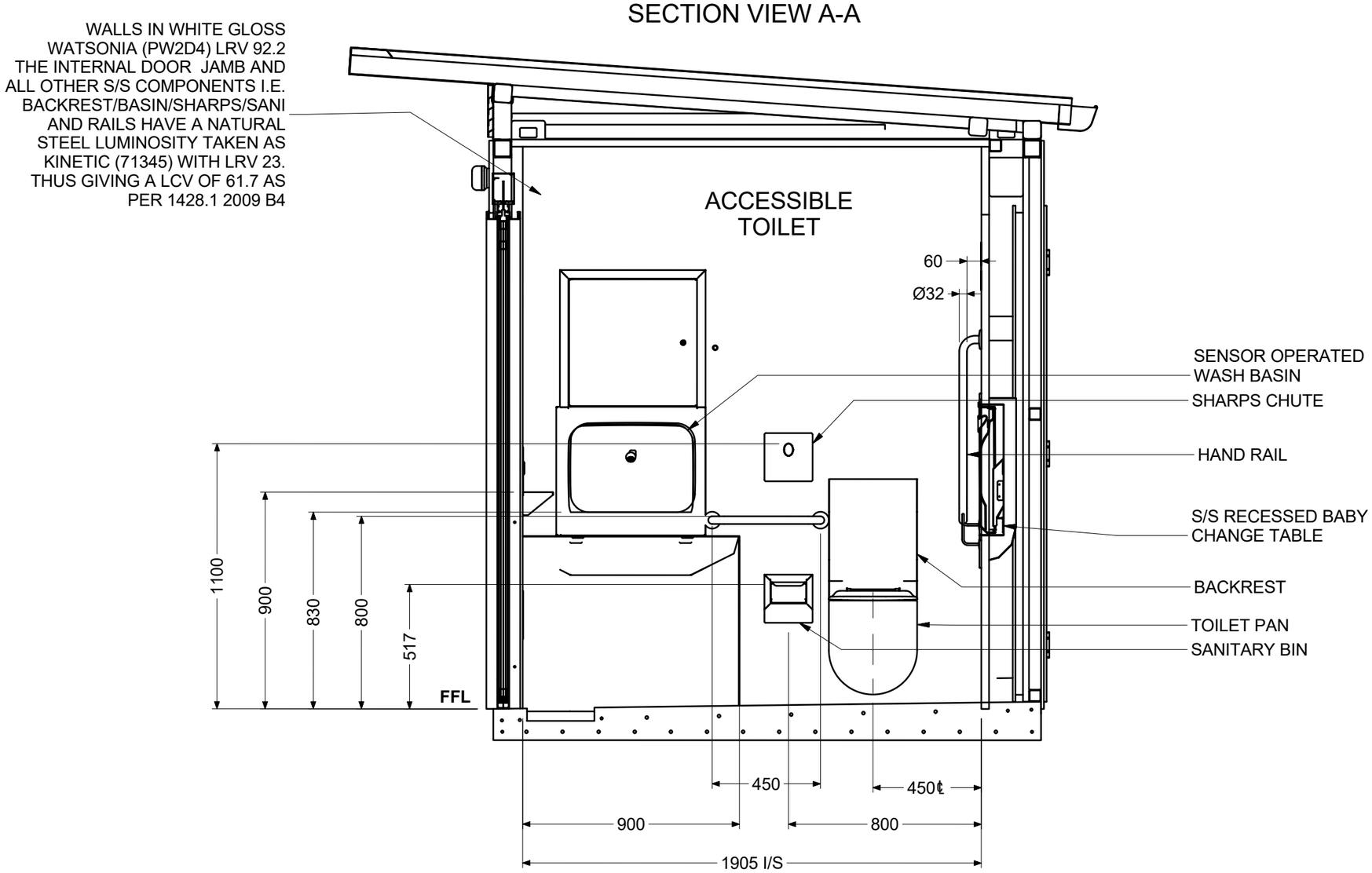

PLAN VIEW - NO ROOF

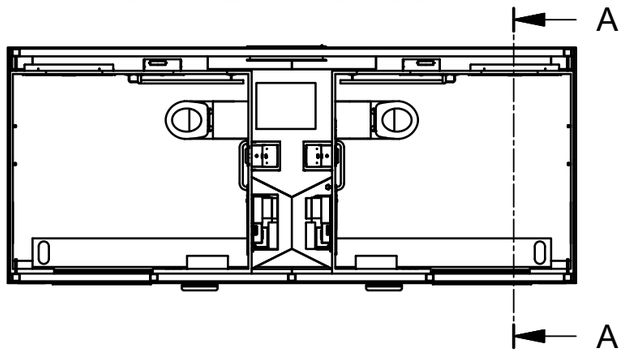

NOTE: TOUCH FREE SENSOR
OPERATED BASIN HAS
CERTIFICATE OF ACCREDITATION

exeLOO®

New Zealand
26 Paramount Dve Henderson 0610
PO Box 33-256 Takapuna, Auckland
T: +64-9-838-8912 F: +64-9-838-8913

Australia
Unit 18, 62-66 Newton Rd Wetherill Park
PO Box 12 Liverpool NSW 1871
T: +61-2-975-3444 F: +61-2-1-800-105-504

USA
954 Toro St San Luis Obispo CA 93401
PO Box 13310 San Luis Obispo CA 93406
T: (800) 676-5290 or 1-800-303-3506

Description: JUPITER TWIN 32DD AUS		Proj:	Units: mm	Rev. 1-B	Rev Date. 8/01/2019
		Tolerance: +/-0.5	Scale: N.T.S.	Checked by:	Approved by:
Material:	Finish: REF	Drawn by: JJG	Creation Date: 16/05/2018	Sheet No. 6 / 11	Drawing No: AS-JUP32DD-AU

DO NOT SCALE - IF IN DOUBT ASK

SPECIFICATION SUBJECT TO CHANGE WITHOUT NOTICE

LONG SECTION B-B

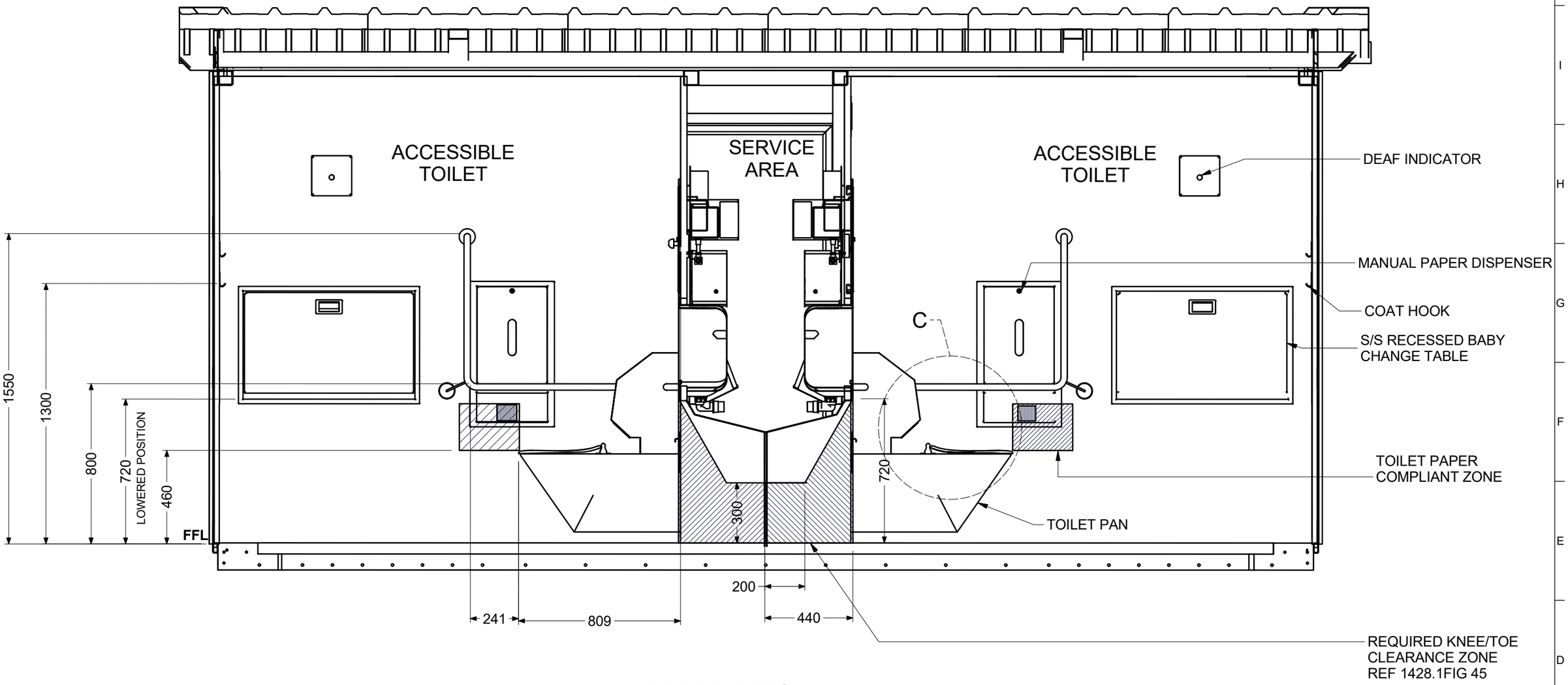

DETAIL VIEW C

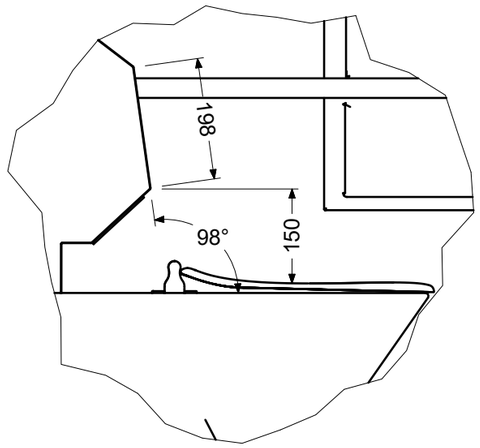

PLAN VIEW - NO ROOF

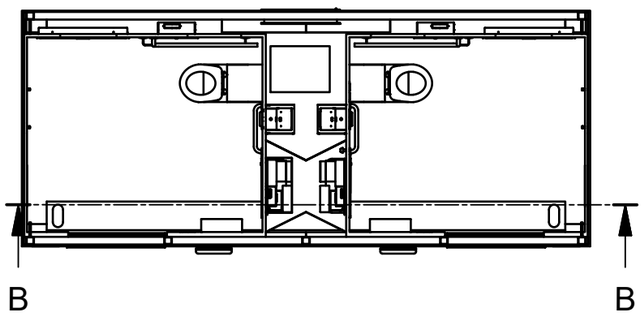

exeLOO®

New Zealand
26 Paramount Dve Henderson 0610
PO Box 33-256 Takapuna, Auckland
T: +64-9-838-8912 F: +64-9-838-8913

Australia
Unit 18, 62-66 Newton Rd Wetherill Park
PO Box 12 Liverpool NSW 1871
T: +61-2-975-3444 F: +61-2-1-800-105-504

USA
954 Toro St San Luis Obispo CA 93401
PO Box 13310 San Luis Obispo CA 93406
T: (800) 676-5290 or 1-800-303-3506

Description:	Proj:	Units:	Rev.	Rev Date.
JUPITER TWIN 32DD AUS		mm	1-B	8/01/2019

Tolerance:	Scale:	Checked by:	Approved by:
+/-0.5	N.T.S.		

Material:	Finish:	Drawn by:	Creation Date:	Sheet No.	Drawing No:
	REF	JJG	16/05/2018	7 / 11	AS-JUP32DD-AU

DO NOT SCALE - IF IN DOUBT ASK

SPECIFICATION SUBJECT TO CHANGE WITHOUT NOTICE

SECTION VIEW C-C

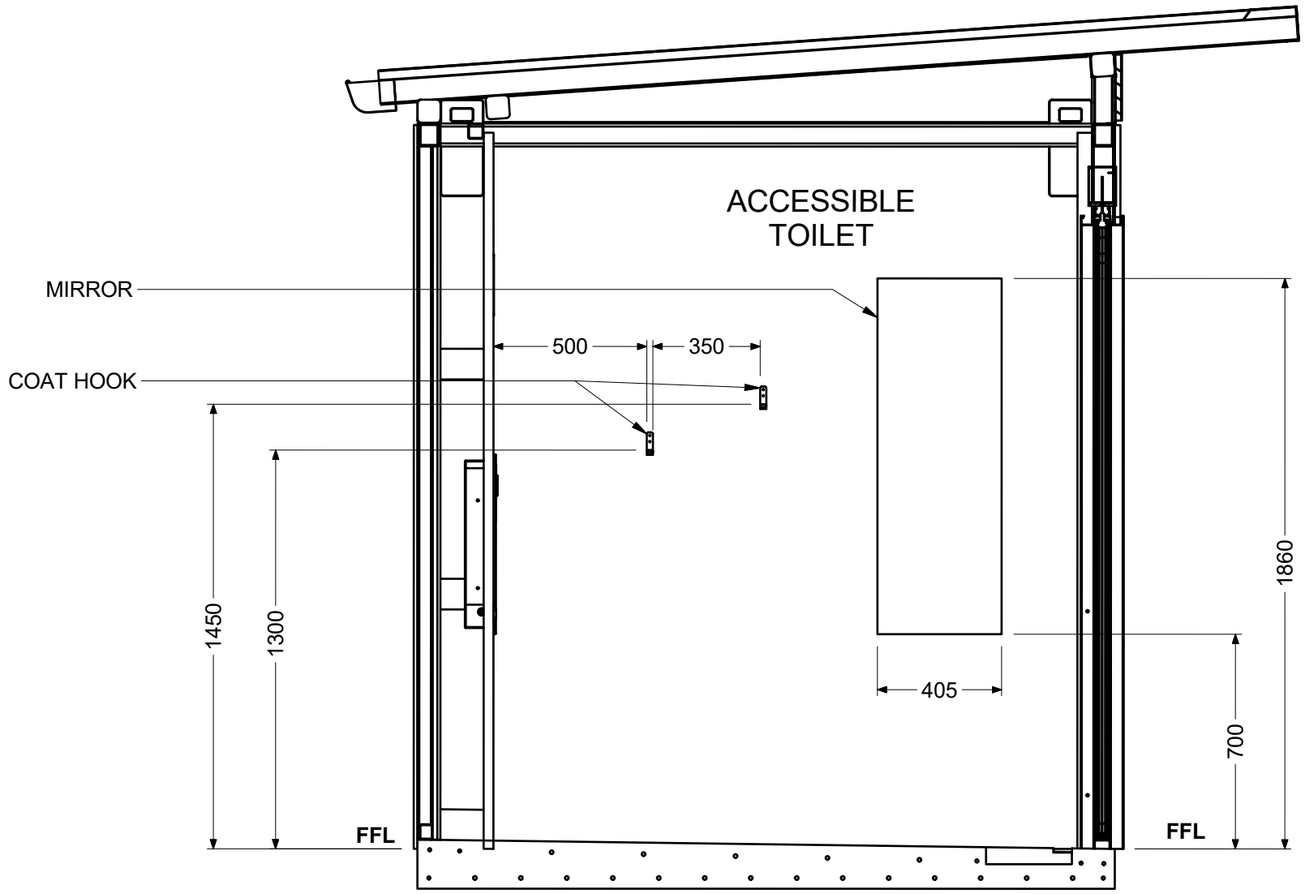

PLAN VIEW - NO ROOF

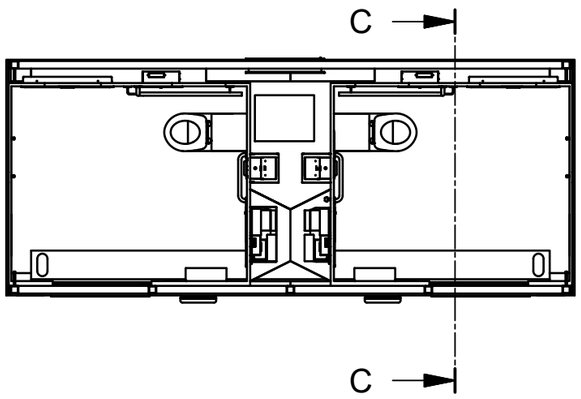

exeLOO®

New Zealand
26 Paramount Dve Henderson 0610
PO Box 33-256 Takapuna, Auckland
T: +64-9-838-8912 F: +64-9-838-8913

Australia
Unit 18, 62-66 Newton Rd Wetherill Park
PO Box 12 Liverpool NSW 1871
T: +61-2-975-3444 F: +61-2-1-800-105-504

USA
954 Toro St San Luis Obispo CA 93401
PO Box 13310 San Luis Obispo CA 93406
T: (800) 676-5290 or 1-800-303-3506

Description: JUPITER TWIN 32DD AUS		Proj:	Units: mm	Rev. **1-B**	Rev Date. **8/01/2019**
		Tolerance: +/-0.5	Scale: N.T.S.	Checked by:	Approved by:
Material:	Finish: REF	Drawn by: JJG	Creation Date: 16/05/2018	Sheet No. 8 / 11	Drawing No: **AS-JUP32DD-AU**

DO NOT SCALE - IF IN DOUBT ASK

SPECIFICATION SUBJECT TO CHANGE WITHOUT NOTICE

LONG SECTION D-D

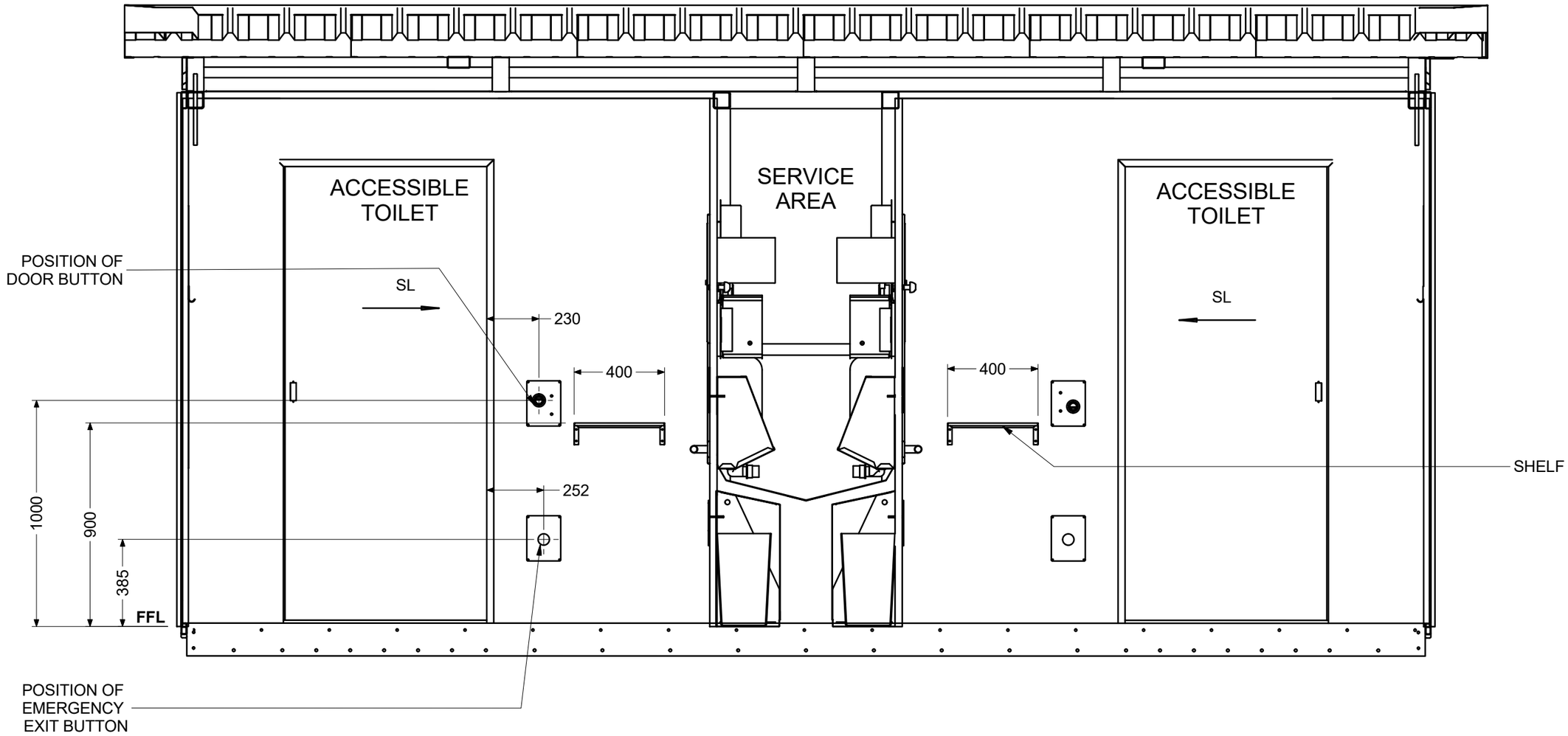

PLAN VIEW - NO ROOF

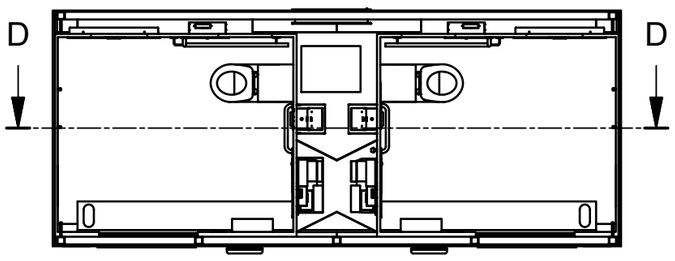

exeLOO®

New Zealand
26 Paramount Dve Henderson 0610
PO Box 33-256 Takapuna, Auckland
T: +64-9-838-8912 F: +64-9-838-8913

Australia
Unit 18, 62-66 Newton Rd Wetherill Park
PO Box 12 Liverpool NSW 1871
T: +61-2-975-3444 F: +61-2-1-800-105-504

USA
954 Toro St San Luis Obispo CA 93401
PO Box 13310 San Luis Obispo CA 93406
T: (800) 676-5290 or 1-800-303-3506

Description: JUPITER TWIN 32DD AUS		Proj:	Units: mm	Rev. **1-B**	Rev Date. **8/01/2019**
		Tolerance: +/-0.5	Scale: N.T.S.	Checked by:	Approved by:
Material:	Finish: REF	Drawn by: JJG	Creation Date: 16/05/2018	Sheet No. 9 / 11	Drawing No: **AS-JUP32DD-AU**

DO NOT SCALE - IF IN DOUBT ASK

SPECIFICATION SUBJECT TO CHANGE WITHOUT NOTICE

TOILET SIGN (NTS)

5mm CORNER RADIUS TYP

ALL SIGNS HAVE CONTINUOUS SURFACE
FIXED WITH 3M 200MP ADHESIVE

ULTRAMARINE LOW SHEEN/MATT FINISH

LOW SHEEN/MATT ANODISED
ALUMINIUM BACKGROUND

5mm BORDER

ARIAL FONT LEFT JUSTIFIED
TACTILE CHARACTERS 1.2mm EMBOSSED HEIGHT
UPPER CASE TACTILE CHARACTERS 20mm
LOWER CASE TACTILE CHARACTERS 10mm
RH FOR RIGHT HAND TRANSFER
LH FOR LEFT HAND TRANSFER

EMBOSSED CONTINUOUS SIGN
WITH 1.5mm RAISED & DOMED GRADE 1 BRAILLE

5mm CORNER RADIUS TYP

ALL SIGNS HAVE CONTINUOUS SURFACE
FIXED WITH 3M 200MP ADHESIVE

ULTRAMARINE LOW SHEEN/MATT FINISH

LOW SHEEN/MATT ANODISED
ALUMINIUM BACKGROUND

5mm BORDER

ARIAL FONT LEFT JUSTIFIED
TACTILE CHARACTERS 1.2mm EMBOSSED HEIGHT
UPPER CASE TACTILE CHARACTERS 20mm
LOWER CASE TACTILE CHARACTERS 10mm
RH FOR RIGHT HAND TRANSFER
LH FOR LEFT HAND TRANSFER

EMBOSSED CONTINUOUS SIGN
WITH 1.5mm RAISED & DOMED GRADE 1 BRAILLE

exeLOO®

New Zealand
26 Paramount Dve Henderson 0610
PO Box 33-256 Takapuna, Auckland
T: +64-9-838-8912 F: +64-9-838-8913

Australia
Unit 18, 62-66 Newton Rd Wetherill Park
PO Box 12 Liverpool NSW 1871
T: +61-2-975-3444 F: +61-2-1-800-105-504

USA
954 Toro St San Luis Obispo CA 93401
PO Box 13310 San Luis Obispo CA 93406
T: (800) 676-5290 or 1-800-303-3506

Description: ACCESSIBLE TOILET SIGN		Proj:	Units: mm	Rev. **1-D**	Rev Date. **9/07/2018**
		Tolerance: +/-0.5	Scale: N.T.S.	Checked by:	Approved by:
Material: Generic	Finish: REF	Drawn by: JJG	Creation Date: 10/02/2014	Sheet No. 10/ 11	Drawing No: **SIGN RH TOILET IDICATION V2**

DO NOT SCALE - IF IN DOUBT ASK

SPECIFICATION SUBJECT TO CHANGE WITHOUT NOTICE

BUTTON, LIGHT AND BRAILLE POSITIONS

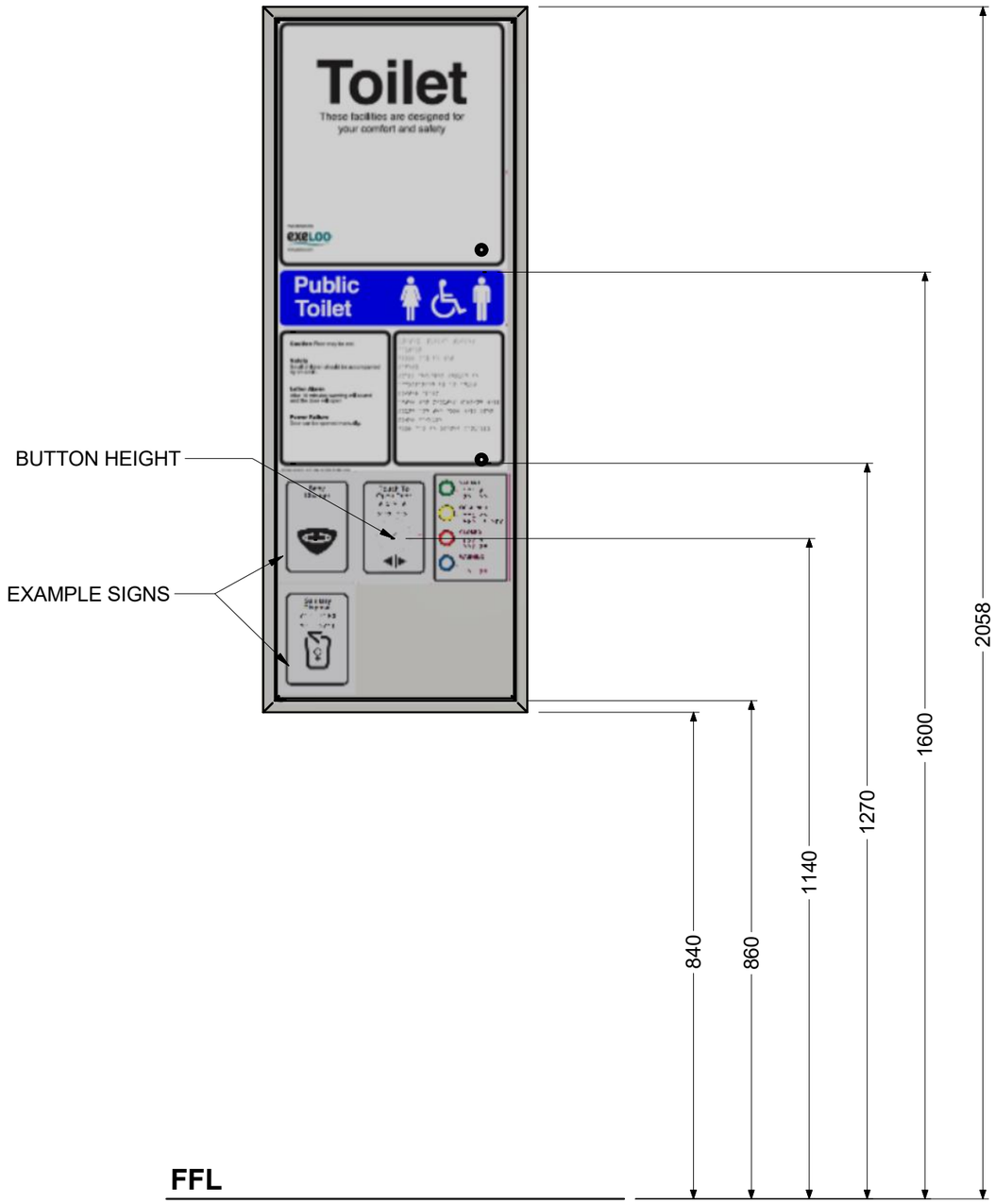

BUTTON, LIGHT AND BRAILLE POSITIONS

exeLOO®

New Zealand
26 Paramount Dve Henderson 0610
PO Box 33-256 Takapuna, Auckland
T: +64-9-838-8912 F: +64-9-838-8913

Australia
Unit 18, 62-66 Newton Rd Wetherill Park
PO Box 12 Liverpool NSW 1871
T: +61-2-975-3444 F: +61-2-1-800-105-504

USA
954 Toro St San Luis Obispo CA 93401
PO Box 13310 San Luis Obispo CA 93406
T: (800) 676-5290 or 1-800-303-3506

Description: SIGN DOOR ASSEMBLY		Proj:	Units: mm	Rev. **1-C**	Rev Date. **27/02/2017**
		Tolerance: +/-0.5	Scale: N.T.S.	Checked by:	Approved by:
Material:	Finish: REF	Drawn by: JJG	Creation Date: 1/05/2006	Sheet No. 11/ 11	Drawing No: **SIGN FRAME MU001**

DO NOT SCALE - IF IN DOUBT ASK

SPECIFICATION SUBJECT TO CHANGE WITHOUT NOTICE